SUSPENSION - REAR
Article Text

1994 Celsior/Lexus LS 400
For Lextreme

Thursday, January 29, 2004 04:52PM

ARTICLE BEGINNING

1994 SUSPENSION
Rear

ES250, LS400

DESCRIPTION & OPERATION

ES250 models use dual-link strut-type independent suspension consisting of 2 suspension arms in parallel on each side of an axle carrier and hub assembly. Attached to each side of the axle carrier are a coil spring, shock assembly, strut rod and stabilizer bar. LS400 models use double wishbone suspension consisting of upper "A" arms and 2 unequal length lower arms, strut rod and stabilizer bar.

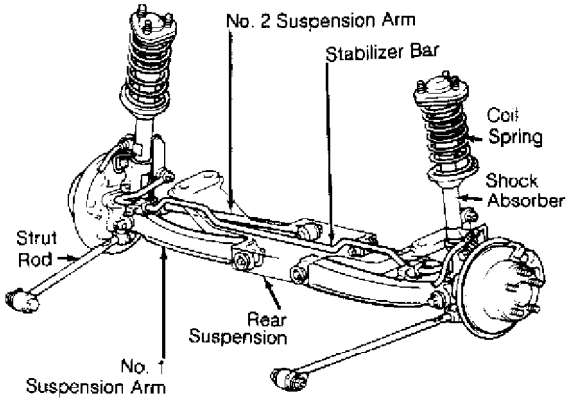

Fig. 1: Locating Rear Suspension Components (ES250)
Courtesy of Toyota Motor Sales, U.S.A., Inc.

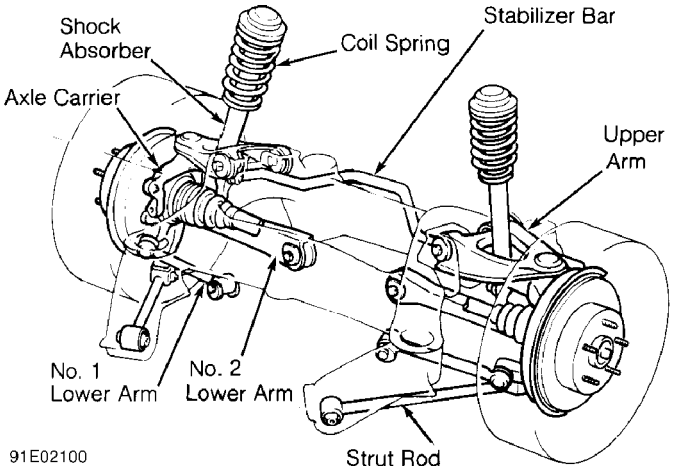

Fig. 2: Locating Rear Suspension Components (LS400)
Courtesy of Toyota Motor Sales, U.S.A., Inc.

CAUTION: If vehicle is equipped with air suspension, turn off air suspension switch, located inside trunk on left side.

WHEEL BEARING ADJUST (ES250)

ES250

1) Raise and support vehicle. Place one hand on the dust shield near the axle bearing carrier. Rotate rear wheel by hand. If rotation is smooth and free, wheel bearing is okay. Remove brake caliper and suspend with wire. Place match marks on axle hub and disc for assembly reference.

2) Remove 2 screws attaching disc to hub. Remove the disc from hub. Check bearing play in axial direction with a dial indicator. The maximum bearing play should be .002" (.05 mm).

WHEEL BEARING ADJUST (LS400)

LS400

1) Raise and support vehicle. Place one hand on the dust shield near the axle bearing carrier. Rotate rear wheel by hand. If rotation is smooth and free, wheel bearing is okay. Raise and support vehicle. Remove rear wheels.

2) Remove brake caliper and suspend with wire. Place match marks on axle hub and disc for assembly reference. Remove 2 screws attaching disc to hub. Remove the disc from hub. Check bearing play in axial direction with a dial indicator. The maximum allowable bearing axial is .002" (.05 mm).

3) Check axle hub runout. Maximum hub runout should be .0028" (.07 mm). If bearing play is excessive, replace axle bearing. If hub runout is excessive, replace hub. See WHEEL BEARINGS & AXLE CARRIER ASSEMBLY (LS400) R & I.

STABILIZER BAR R & I (ES250)

Removal (ES250)

1) Remove tail pipe assembly. Remove stabilizer links. Remove bolts and disconnect the ABS speed sensor wire clamps. Remove 4 bolts retaining stabilizer brackets and cushions to frame.

2) Support the fuel tank and remove fuel tank strap bolts. Lower the fuel tank approximately 1.57" (40.0 mm). Remove the stabilizer bar.

Installation

Holding stabilizer bar in place, install fuel tank and fuel tank straps and tighten bolts. Connect ABS speed sensor wire. Install

stabilizer bar to body with bracket and cushions. Tighten bracket bolts to specification. Replace fuel tank, fuel tank straps and tighten bolts. Connect ABS speed sensor wire. Install tail pipe assembly.

STABILIZER BAR R & I (LS400)

Removal (LS400)

1) Disconnect both left and right upper stabilizer link nuts. Remove 4 stabilizer bushing bolts, retainer brackets and bushings. Remove stabilizer from vehicle.

Installation

To install, reverse removal procedures.

WHEEL BEARINGS & AXLE HUB ASSEMBLY (ES250) R & I

Removal

1) Raise and support vehicle. Remove rear wheels. Remove 2 screws attaching brake disc to hub. Remove brake disc. Remove parking brake assembly. See PARKING BRAKE R & I in appropriate BRAKES article. Remove 4 axle hub mounting bolts. Remove the axle hub and bearings.

2) Place axle hub in soft jawed vise. Using a chisel and hammer, unstake nut. Remove the lock nut. Using (09950-20017) push the rear axle shaft out of rear axle hub. Remove inner race (outer) from axle shaft with Puller (09950-20017).

3) Remove outer grease seal. Press bearing out of hub using Press Tools (09550-10012, 09550-10010 and 09558-10010).

Installation

1) Always replace bearing as a complete assembly. Apply molybdenum grease on outer bearing race and press bearing into axle hub. Install inner (outside) bearing race. Apply grease to seal lips. Drive new grease seal into axle hub. Press axle shaft into axle hub. Tighten lock nut to specification and stake lock nut to axle. To complete installation, reverse removal procedure.

WHEEL BEARINGS & AXLE CARRIER ASSEMBLY (LS400) R & I

Removal

1) Raise and support vehicle. Remove rear wheels. Have an assistant depress the brake pedal. Remove drive shaft lock nut. Remove brake caliper and suspend with wire. Remove 2 brake disc retaining screws. Remove brake disc rotor.

2) Remove parking brake shoes and cable. See PARKING BRAKES

& I in appropriate BRAKES article. Remove 3 bolts and ABS speed sensor. Remove strut rod and lower suspension arms. See LOWER CONTROL ARMS removal. Remove lower shock absorber nut (do not remove bolt).

3) Remove 2 upper arm retaining bolts. Remove lower bolt on shock absorber. Remove axle carrier with upper arm. Place axle carrier in vise. Loosen the upper arm retaining nut (leave the nut attached). Tap nut with a hammer and brass punch to remove upper arm from axle carrier

4) Remove bearing dust deflector with a screwdriver. Remove grease seal with Puller (09308-00010). Discard grease seal. Remove 2 bolt and nuts retaining dust cover plate to axle carrier. Rotate dust cover plate to allow installation of Bearing Puller (09950-20017).

5) Press axle hub out of axle carrier with Bearing Puller (09950-20017). Remove dust cover plate. Remove inner bearing race (outside) with Race Remover (09550-20017) from axle hub. Remove outer grease seal. Remove bearing "C" clip. Temporarily install the inner race in axle bearing and press bearing from axle carrier.

Installation

1) Press new bearing into axle carrier with Press Tools (09309-36010, 09308-32010). Install snap ring into axle carrier. Install dust cover plate, retaining nuts and bolts. Install new outer grease seal. Press axle hub into axle carrier.

2) Install new inner grease seal. Install bearing dust deflector. Ensure dust deflector hole is aligned with ABS speed sensor hole in axle carrier. Install upper arm on axle carrier and tighten new nut to specification.

3) Install rear axle carrier with upper arm. Place drive shaft through axle bearing as upper arm is being attached. Tighten upper arm bolts to specification. Do not damage grease seal or ABS speed sensor rotor. Install lower shock absorber, bolt and nut. Tighten to specification. To complete installation, reverse removal procedure.

AXLE CARRIER ASSEMBLY (ES250) R & I

Removal

1) Raise and support vehicle. Remove rear wheels. Remove rear brake caliper and disc assembly. See PARKING BRAKE R & I in appropriate BRAKES article. Remove hub assembly from axle carrier. See WHEEL BEARINGS & AXLE HUB ASSEMBLY (ES250) removal. Remove axle carrier "O" ring. Care should be taken not to damage ABS speed sensor rotor.

2) Remove strut rod bolt and nut from axle carrier. Remove No. 1 and 2 suspension arms from axle hub carrier. Remove axle carrier mounting bolt and nut from lower shock absorber assembly. Remove axle

hub and bearing assembly.

Installation

1) Mount axle carrier on lower shock bolts. Tighten shock bolts to specification. Temporarily install No. 1 and 2 lower suspension arms to axle carrier. Install strut rod to axle carrier. See Fig. 3.

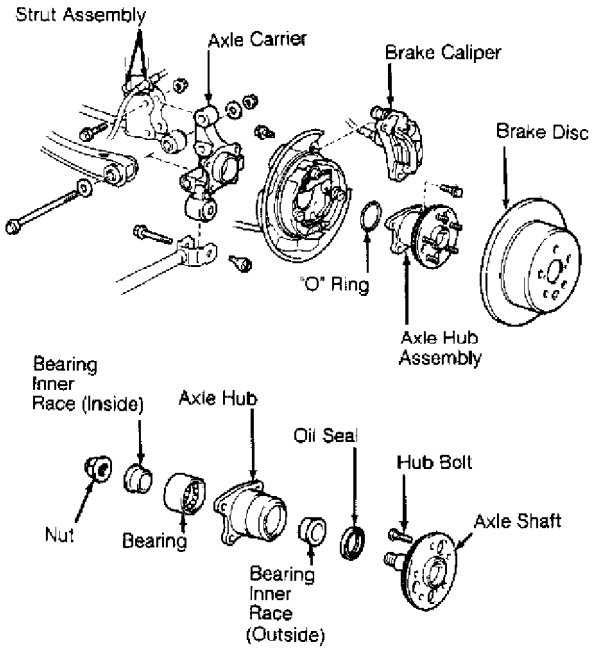

Fig. 3: Exploded View of Lower Rear Suspension (ES250)
Courtesy of Toyota Motor Sales, U.S.A., Inc.

2) Install parking brake assembly. See PARKING BRAKE R & I in BRAKE SYSTEMS article. Install rear hub to axle carrier. Tighten retaining bolts to specification. Install brake disc and caliper assembly. Reference match marks made during disassembly.

3) Install rear wheels and tighten lug nuts to specification. With vehicle weight on suspension, tighten 2 lower arm retaining bolts and lower strut rod to axle carrier to specification. Check wheel alignment. See WHEEL ALIGNMENT.

STRUT ASSEMBLY R & I (ES250)

Removal (ES250)

1) Remove brake hose union and gaskets from brake caliper. Remove brake hose clip and brake hose from strut assembly bracket. Disconnect stabilizer link from shock absorber bracket.

2) Remove rear side seat back and package tray trim. Remove dust support and loosen strut assembly center rod nut. Remove strut

assembly mounting nuts. Remove lower strut-to-bearing carrier bolt. Remove shock absorber from vehicle. See Fig. 3.

Disassembly

Mount strut assembly in vise. Compress coil spring using Spring Compressor (09727-30020). Remove strut assembly center nut. Remove suspension support, coil spring, upper insulator, bumper and lower insulator. Replace strut lower strut assembly as a complete unit only.

WARNING: Strut assembly under high pressure. Loosen ring nut on strut 2 turns to release gas pressure before disposing of strut.

Reassembly

Place strut in vise. Install lower insulator and bumper. Install coil spring. Align spring end within lower spring hollow. Install bumper and upper insulator. Install and align suspension support with mounting bracket. See Fig. 4. Install strut assembly center nut and tighten to specification.

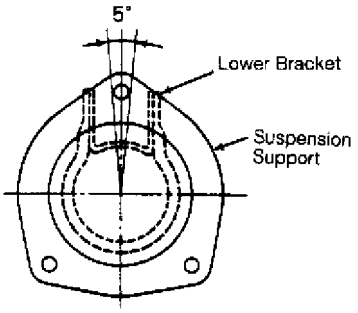

Fig. 4: Aligning Mounting Bracket to Suspension Support (ES250)
Courtesy of Toyota Motor Sales, U.S.A., Inc.

Installation

To install, reverse removal procedure. Tighten nuts and bolts to specification. Install rear wheels. See TORQUE SPECIFICATIONS table at end of this article. Bleed hydraulic brakes. See BRAKE BLEEDING article in BRAKES section.

STRUT ASSEMBLY R & I (LS400)

Removal (LS400)

1) Raise and support vehicle. Remove rear seat cushion and rear seat back. Remove right and left scuff plates. Remove right and left roof side inner garnishes. Remove package trim.

2) Disconnect right and left stabilizer bar links from stabilizer bar. Remove 2 brake caliper bolts from rear axle carrier.

Hang caliper with wire. Remove nut on lower side of shock absorber. Support rear axle carrier with jack. Remove dust cap on top of strut.

3) Loosen strut rod center nut (do not remove nut). Remove 3 suspension support retaining nuts. Lower rear axle carrier and remove lower shock absorber. Remove strut assembly. See Fig. 5. Remove drive axle shaft. See RWD Axle shafts article in DRIVE AXLES.

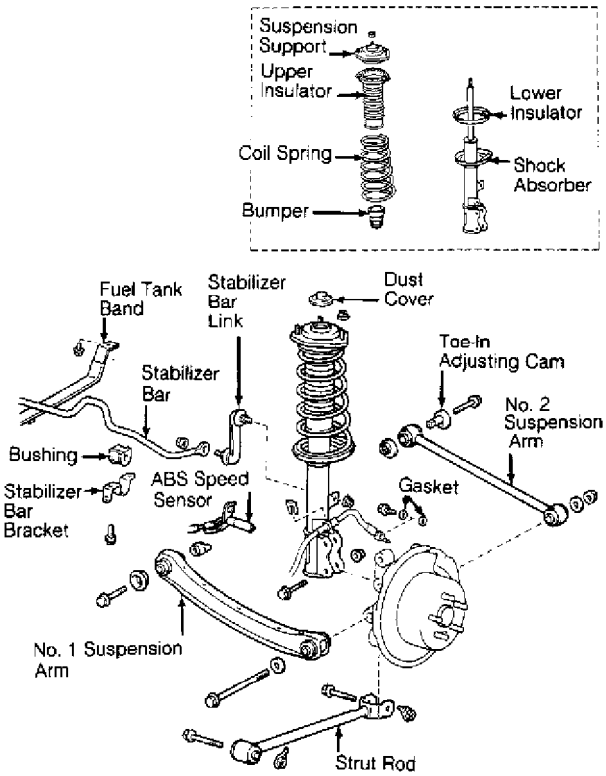

Fig. 5: Exploded View Of Rear Strut Assembly (ES250)
Courtesy of Toyota Motor Sales, U.S.A., Inc.

Disassembly

Place strut in a soft-jawed vise. Using Spring Compressor (09727-30020), compress strut coil spring. Remove strut center nut. Remove suspension support, coil spring, insulator and spring bumper from strut rod. Remove lower insulator. Shock absorber assembly must be replaced as a complete unit.

WARNING: Shock absorber assembly contains gas under high pressure. Before disposing of shock absorber assembly, drill a small hole approximately 1.18-2.00" (30-50 mm) up from beginning of lower shock tube.

Reassembly

1) Install lower spring bumper to lower suspension support. Install insulator to suspension support. Install coil spring. Fit the

lower end of coil spring in the spring seat.

2) Rotate upper support until one mounting stud is perpendicular to lower strut mounting bolt eye. Tighten strut center nut (hand tight only). Remove coil spring compressor.

Installation

1) Install strut assembly on vehicle. Tighten 3 mounting nuts to specification. Install shock absorber cap. Tighten lower strut-to-axle carrier bolt to specification. Tighten upper strut center nut to specification.

2) Install brake caliper, tighten mounting bolt to specification. Connect right and left stabilizer bar links. To complete installation, reverse removal procedure. Check wheel alignment. See WHEEL ALIGNMENT.

LOWER CONTROL ARMS R & I (ES250)

Removal (ES250)

Raise and support vehicle. Remove wheels. Disconnect ABS speed sensor wire clamp from No. 1 suspension arm. Disconnect bolts and nuts holding No. 1 and 2 suspension arms to axle carrier. Place match marks on adjusting cams and body. Remove No. 2 suspension arm retaining bolts from body. Remove No. 2 suspension arm. Remove No. 1 suspension arm retaining bolt. Remove No. 1 suspension arm.

Installation

The right and left side suspension arms are stamped with "L" or "R". Install the bushing with slit side facing rear. Install suspension arm with small paint spot outside and facing rearward. To complete installation, reverse removal procedure. Check wheel alignment. See WHEEL ALIGNMENT.

LOWER CONTROL ARMS R & I (LS400)

Removal (LS400)

1) Raise and support vehicle. Remove wheels. Place match marks on adjusting cam and body. Remove adjusting cam bolt. Remove nut on axle carrier side of No. 1 lower arm. Using Puller (09628-10011), remove No. 1 suspension arm.

2) Disconnect stabilizer bar link from No. 2 suspension arm. Place match marks on lower No. 2 suspension arm cam bolt. Remove adjusting cam bolt. Remove No. 2 suspension arm. Remove cover from No. 2 suspension arm.

Installation (LS400)

1) Install No. 2 lower suspension arm cover. Install No. 2 lower suspension arm to axle carrier. Install No. 2 suspension arm to body. Reference match marks made during disassembly. Tighten retaining bolts to specification. Connect stabilizer bar link to No. 2 lower control arm.

2) Install No. 1 lower suspension arm to carrier. Tighten new No. 1 lower suspension ball joint nut to specification. Install adjusting cam bolt. Reference match marks made during disassembly. Tighten cam bolt to specification. Check wheel alignment. See WHEEL ALIGNMENT.

LOWER CONTROL ARM BUSHINGS R & I

Removal & Installation

Raise and support vehicle. Remove wheels. Remove lower control arm as previously described. Using Press Tools (09710-30020, 09710-03110 and 09710-03120), remove strut bushing. Press new bushing into strut arm. To complete installation, reverse removal procedure.

TORQUE SPECIFICATIONS (ES250)

TORQUE SPECIFICATIONS (ES250)

Application	Ft. Lbs. (N.m)
Axle Hub-To-Axle Carrier	59 (80)
Brake Hose-To-Caliper	22 (30)
Fuel Tank Bands	29 (39)
Lower Suspension Arm-To-Axle Carrier No. 1 & No. 2	134 (181)
Lower Suspension Arm-To-Body No. 1 & No. 2	83 (113)
Lower Strut Rod-To Body	83 (113)
Lug Nuts	76 (103)
Shock Absorber-To-Axle Carrier	166 (226)
Shock Absorber Center Nut	36 (49)
Stabilizer Bar Brackets	14 (19)
Stabilizer Bar Link Nuts	47 (64)
Strut Rod-To-Axle Carrier	83 (113)
Suspension support-To- Body	29 (39)

TORQUE SPECIFICATIONS (LS400)

TORQUE SPECIFICATIONS (LS400)

ÄÄ

Application	Ft. Lbs. (N.m)
Brake Caliper-To-Axle Carrier	77 (104)
Disc Dust Cover-To-Axle Carrier	43 (59)
No. 1 Lower Suspension Arm-To-Body	136 (184)
No. 2 Lower Suspension Arm-To-Body	136 (184)
No. 1 Lower Suspension Arm-To-Rear Axle Carrier	43 (59)
No. 2 Lower Suspension Arm-To-Rear Axle Carrier	121 (164)
Lug Nuts	76 (103)
Shock Absorber-To-Axle Carrier	101 (137)
Shock Absorber Center Rod-To-Suspension Support	20 (27)
Stabilizer Bar Bushing Bracket	13 (18)
Strut Rod-To-Body	136 (184)
Strut Rod-To-Rear Axle Carrier	136 (184)
Suspension Support-To-Body	47 (64)
Stabilizer Bar Link Nut	26 (35)
Upper Ball Joint-To-Axle Carrier	80 (108)
Upper Suspension Arm-To-Body	121 (164)

ÄÄ

END OF ARTICLE